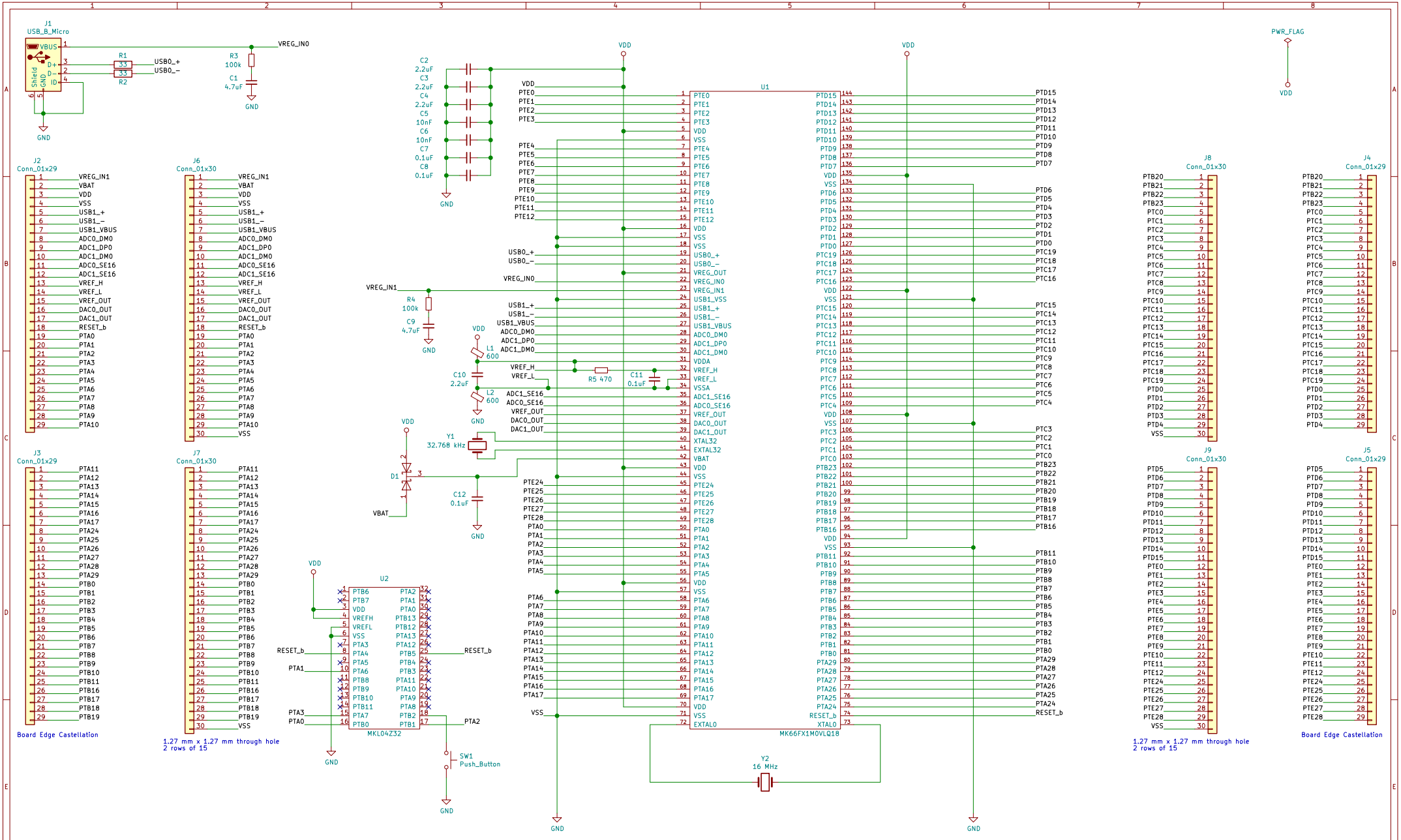

Brian Taylor
brian.taylor@bolderflight.com
Copyright (c) 2018 Bolder Flight Systems
Bolder Flight Systems Inc

Sheet: /
File: Teensy-Pro-cca.sch

Title: Teensy 3.6 Pro

Size: A3	Date: 2018-10-09	**Rev: v1.0-rc2**
KiCad E.D.A. kicad 5.0.0		Id: 1/1