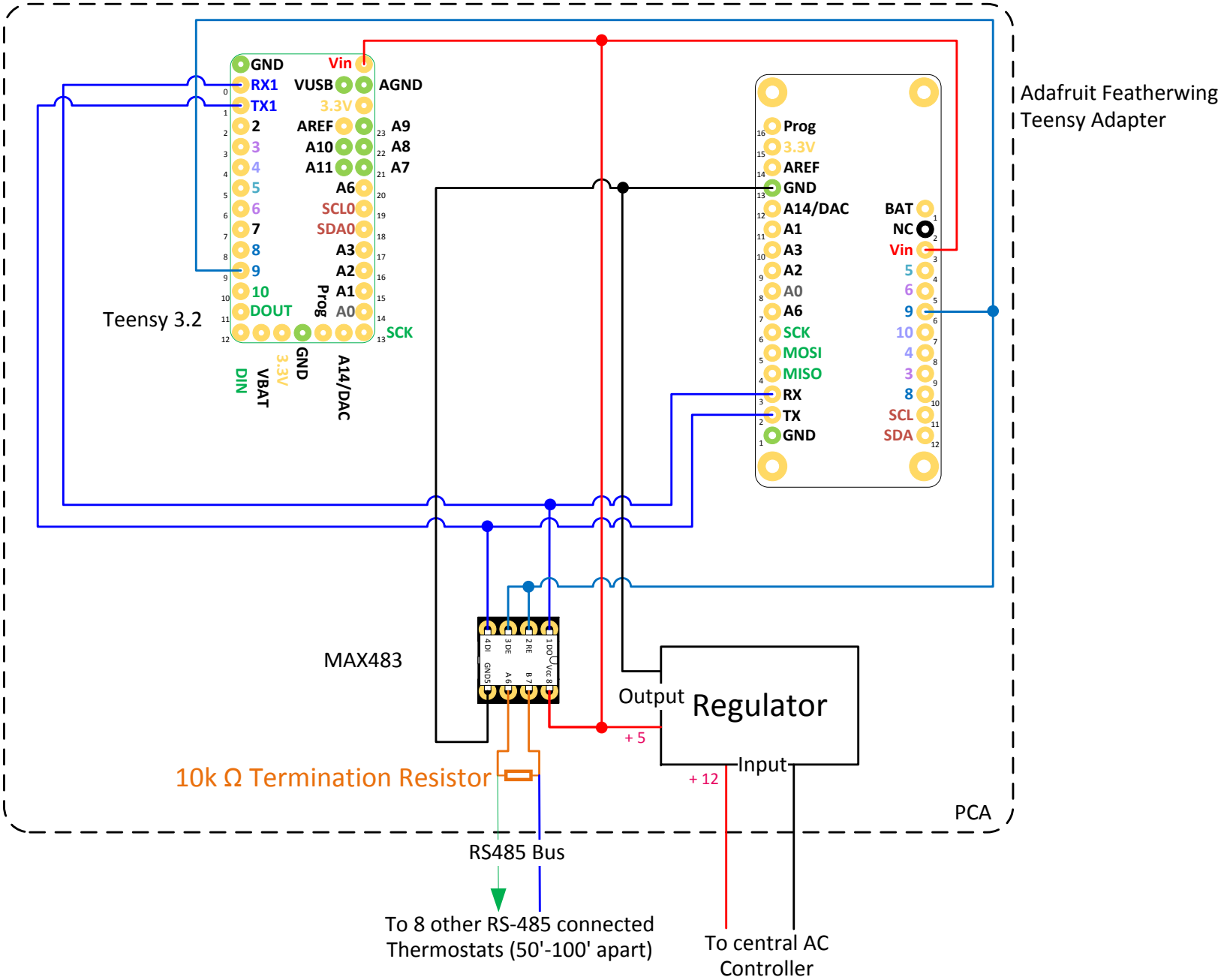RS 485 Subsystem of the prototype thermostat
(19200 Baud, 8 Data, 1 Stop, No Parity)